Submersible Averaging Enclosures

Temperature Sensors

Rev. 12/22/14

BAPI-Box 2 (BB2)

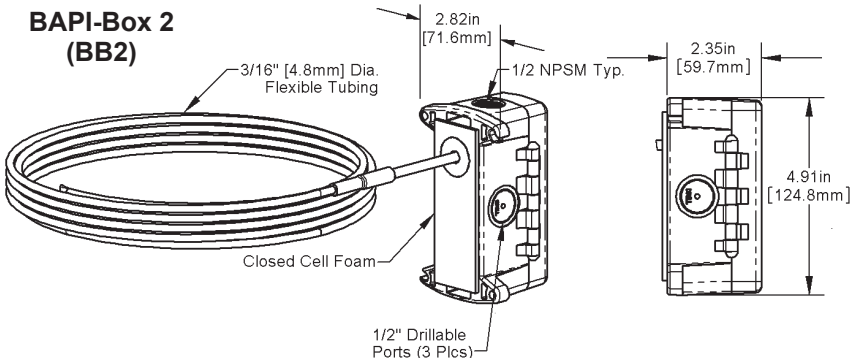

BAPI-Box (BB)

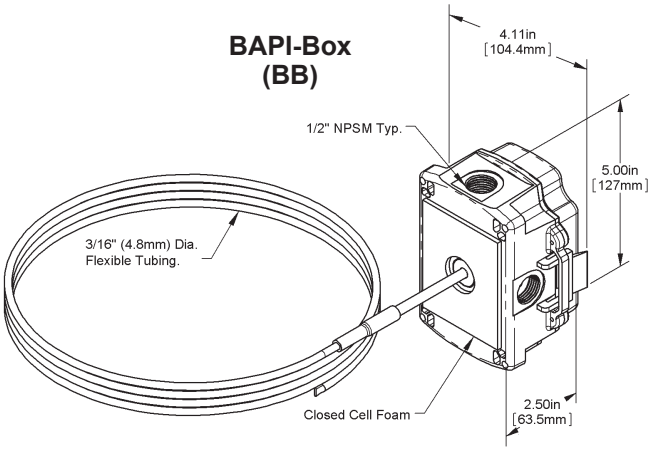

J-Box (JB)

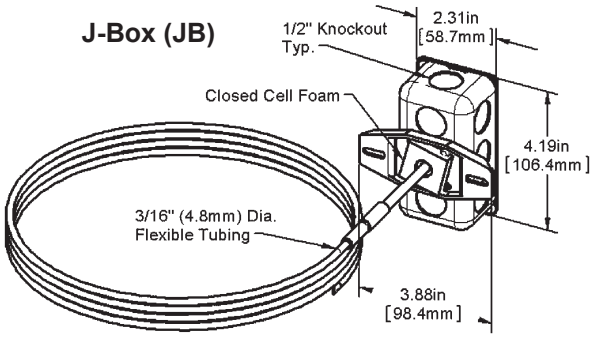

Weatherproof (WP)

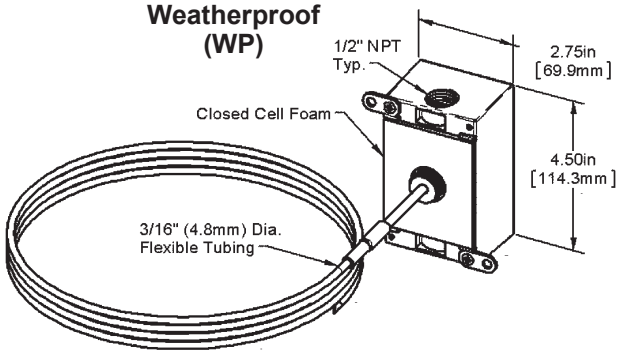

BAPI-Box 4 (BB4)

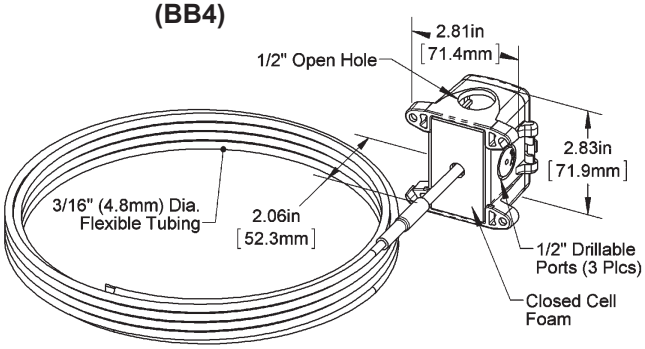
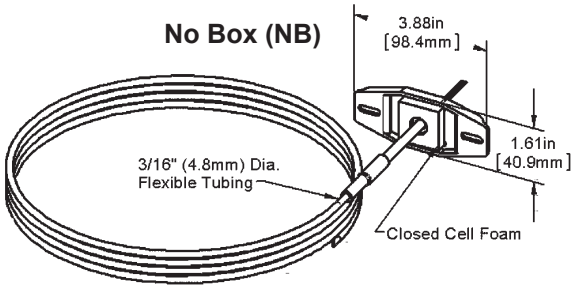
No Box (NB)