Junction Box (Standard)

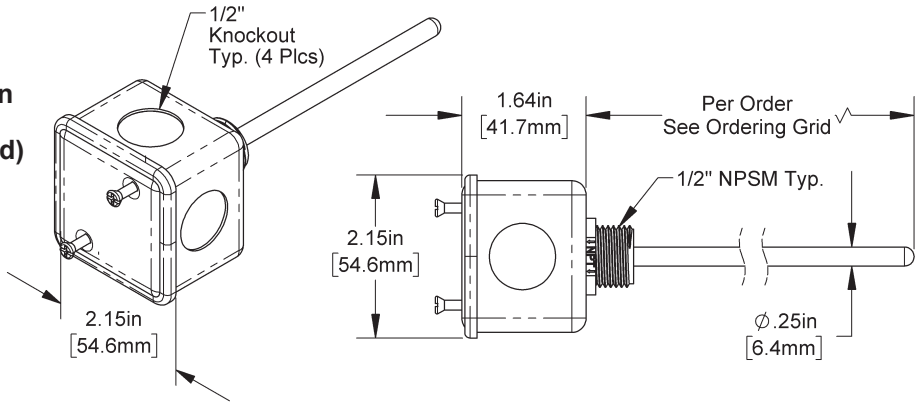

BAPI-Box Crossover (BBX)

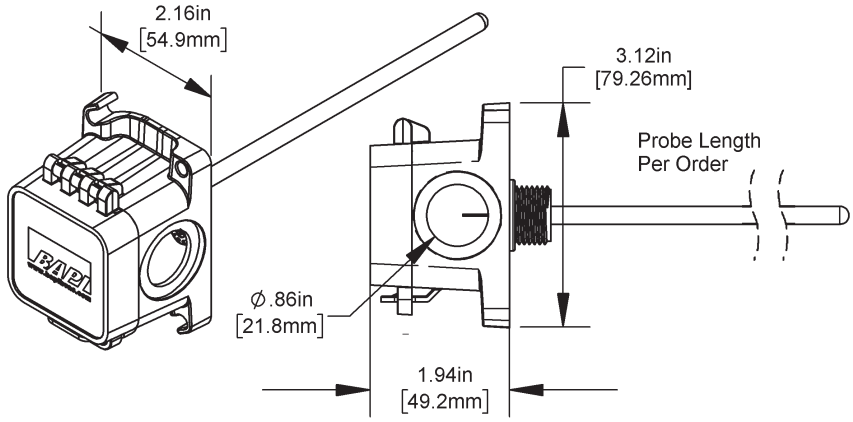

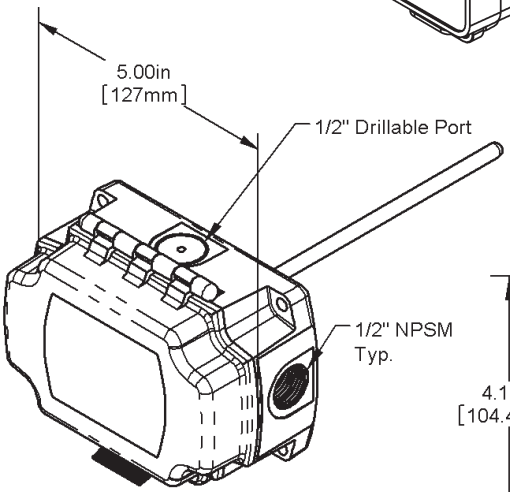

BAPI-Box (BB)

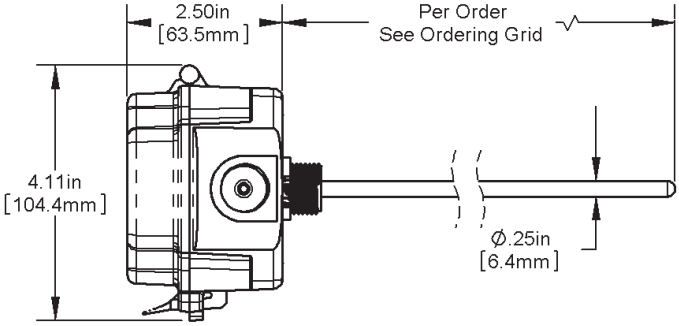
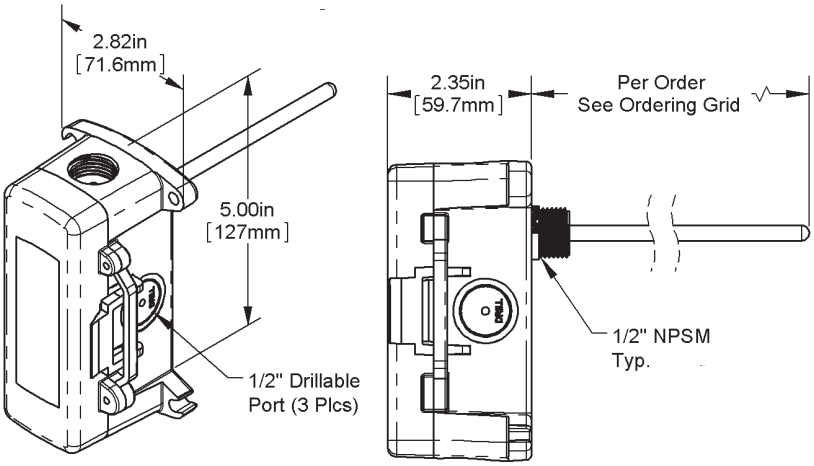
BAPI-Box 2 (BB2)