Humidity or Combination Sensor Dimension Drawings

Rev. 01/31/17

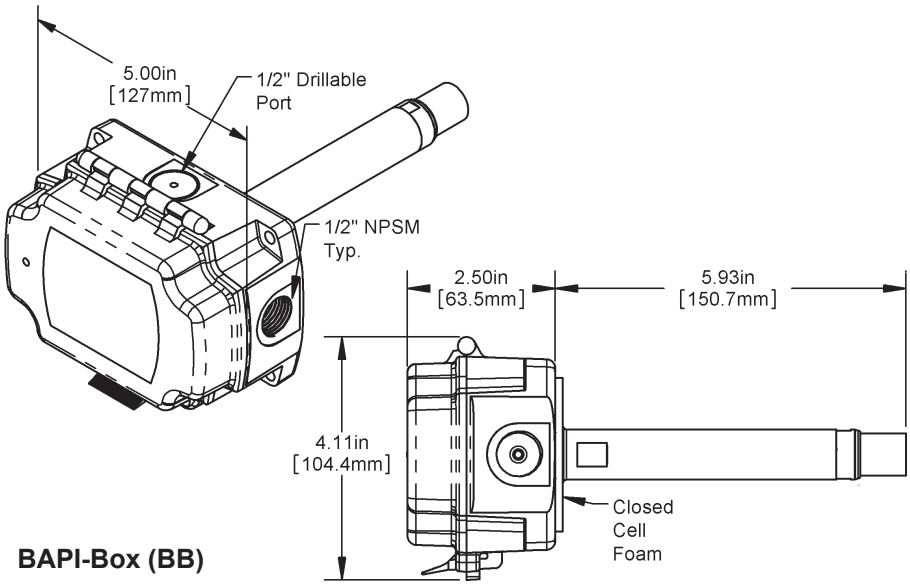

BAPI-Box (BB)

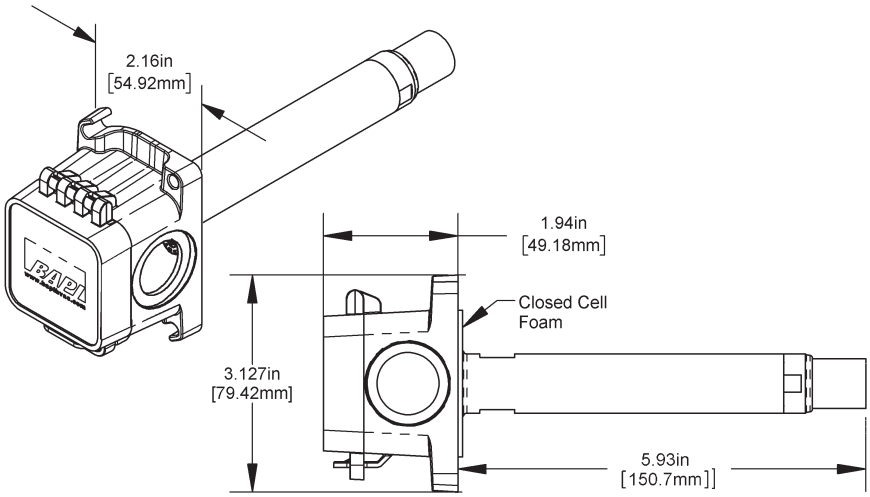

BAPI-Box Crossover (BBX)