BAPI-Stat 4 Modbus Room Sensor

Humidity or Combination Temp/Humidity Sensors

Rev. 09/14/15

Features & Options

- Modbus Serial Communications Protocol
- BAPI-Stat 4 Style Enclosure with Optional Large Display
- Robust Tactile Pushbuttons on Display Units
- Setpoint Adjustment on Display Unit with Optional Humidity Measurement, Fan Speed Control and Occupant Override
- Two Year Warranty

The BAPI-Stat 4MB unit features an optional large LCD with all the visual indicators on the display itself. Display units provide local indication of temperature with temperature setpoint adjustment and optional occupant override.

The unit is also available with humidity measurement and fan speed/mode adjustment for applications with fan coils, heat pumps or unit ventilators.

BAPI-Stat 4MB Unit with and without Display, Setpoint and Override

Specifications

Power:
9 to 40 VDC (24 VDC nominal)
24 VAC +20%/-30%.
Note: AC power requires a separate pair of shielded wires.

Power Consumption:
7 mA max DC; .28 VA maximum AC

Sensing Element:
Thermistor or Semiconductor

Sensor Accuracy:
Temp: ±0.2ºC from 32 to 122ºF (0 to 50°C)
%RH: ±2.0%RH (0 to 80%)

Wiring: 2 pair of 14 to 22AWG*

Mounting:
Standard 2” by 4” J-box
or drywall mount (screws provided)

Environmental Operation Range:
Temperature: 32 to 122 ºF (0 to 50 ºC)
Humidity: 0 to 95%, non-condensing

Agency: RoHS and CE

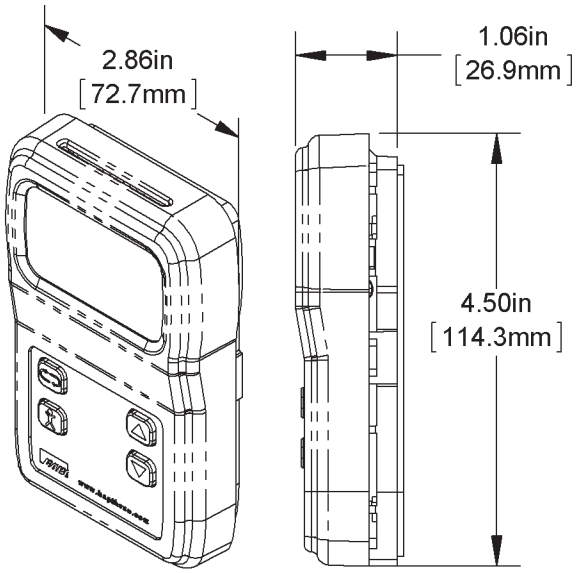

VC350A “EZ” - Voltage Converter

BAPI recommends using DC power on room units for a more stable reading. Our 350mA “EZ” unit is a perfect way to convert 24 VAC to 5, 12, 15 or 24 VDC. The revolutionary “EZ” mounting system allows for snaptrack, DIN rail or surface mounting. See the Accessories section for more info.

*__BAPI__ recommends that you do not run wiring for the Room Units in the same conduit as line voltage wiring or with wiring used to supply highly inductive loads such as motors, generators and coils. Also, these units are not designed for line voltage applications.

Building Automation Products, Inc. • 750 North Royal Avenue, Gays Mills, WI 54631 USA
Tel: +1-608-735-4800 • Fax: +1-608-735-4804 • Email: sales@bapihvac.com • Web: www.bapihvac.com

BAPI-Stat 4 Modbus Room Sensor

Humidity or Combination Temp/Humidity Sensors

Ordering Grids without List Prices are available on our website at www.bapihvac.com

Ordering Information						BAPI-Stat 4MB Room Unit - Temperature and/or Humidity Sensor	List Price	Your Order
BA/BS4MB						BAPI-Stat 4 Style Enclosure with Multi-Mode Pushbuttons	**$130**	**$_____**
	Display Mode					***Must select one***		
	F					Temperatures Displayed in °F		
	C					Temperatures Displayed in °C		
	X					No Display		
		Setpoint Configuration				***Must select one for display units, not available for non-display units***		
		-#	**SETPOINT DISPLAY OPTIONS**					
			Desired Range / **Designator**					
			50 to 90 °F or 10 to 32 °C — **C**					
			55 to 85 °F or 13 to 30 °C — **D**					
			60 to 80 °F or 15 to 27 °C — **E**					
			65 to 80 °F or 18 to 27 °C — **F**					
			70 to 74 °F or 21 to 23 °C — **L**					
			45 to 96 °F or 7 to 36 °C — **G**					
			See App. Notes pg I3 for Additional Setpoint Display Ranges					
			Humidity Measurement			***Must select one***		
			-HN			No Humidity Measurement		
			-H2			Humidity Measurement	**$150**	**$_____**
				Pushbutton Fan Speed/Mode Options		***Must select one***		
				-FN		No Fan Speed Adjustment		
				-F0		Fan Speed Mode 0 (available for display units only)		
				-F1		Fan Speed Mode 1 (available for display units only)		
					Override Configuration	***Must select one***		
					-J	Override Enabled (available for display units only)		
					-Z	No Override		
EXAMPLE								
BA/BS4MB	**F**	**-E**	**-HN**	**-FN**	**-J**		**Total =**	**$_____**
Example Part Number: BA/BS4MBF-E-HN-FN-J								
Your Part Number:								

Building Automation Products, Inc. • 750 North Royal Avenue, Gays Mills, WI 54631 USA
Tel: +1-608-735-4800 • Fax: +1-608-735-4804 • Email: sales@bapihvac.com • Web: www.bapihvac.com