AD592/592-10K Non-Room Sensors in BAPI-Box, BAPI-Box 2 or BAPI-Box 4

BA/592-x-(BB, BB2, BB4) Temperature Sensor

Instructions & Operation

25847_ins_592_Non_Room_BB_BB2 rev. 07/09/15

592 Theory of Operation

The 592 sensor is a two terminal integrated-circuit temperature sensor. The 592 provides an output current directly proportional to absolute temperature. When the temperature of the 592 sensor changes one-Kelvin (one-degree Celsius), then the current through the 592 changes by 1uAmp. 77° Fahrenheit (25° Celsius) is 298.2 Kelvins and the output current from the 592 sensor is 298.2uAmp. Initial accuracy of the 592 temperature sensor is ± 8.1° Fahrenheit (± 4.5° Celsius) at 77° Fahrenheit (25° Celsius).

Since most meters that field technicians use cannot accurately measure currents this low, BAPI recommends that a 10KΩ 0.1% resistor be placed between the sensor output and ground. The 10KΩ resistor changes the current into a voltage that varies 0.01 volts per one degree Celsius temperature change; the voltage at 77°F is 2.982 VDC. Resistors with other tolerances can be used, but you will have greater temperature uncertainty, see the 10KΩ uncertainty table;

BAPI provides two styles of temperature probe with a 592 sensor, one with and one without the 10,000 ohm 0.1% resistor. The one with the resistor has three wires - red, black and white. The one without the resistor has two wires - red and black.

Table 1: 10KΩ Uncertainty

Tolerance	Temperature uncertainty
0.1%	±8.64°F
1%	±13.47°F
5%	±34.93°F

Duct Unit Mounting:

1. Place the sensor in the middle of the duct away from temperature stratified air, coils or humidifiers.
2. Drill the probe hole as depicted below for the enclosure being used. Insert the probe into the duct.
3. Mount the enclosure to the duct using BAPI recommended #8 screws through a minimum of two opposing mounting tabs. A 1/8” pilot hole in the duct makes mounting easier. Use the mounting tabs to mark the pilot hole locations.
4. Snug up the sensors so that the foam backing is depressed to prevent air leakage but do not over-tighten or strip the screw threads.

Note 1: Do not drill into the BAPI-Box enclosures which will violate the NEMA and/or the IP rating.

Note 2: Use caulk or Teflon tape on conduit entries to maintain the appropriate NEMA or IP rating for your application.

Note 3: Conduit entry for outdoor or wet applications should be from the bottom of the enclosure.

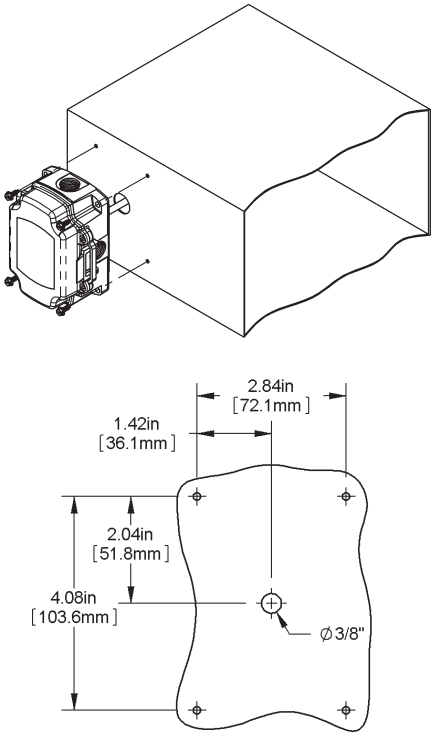

Fig. 1: Duct Mounted Unit in a BAPI-Box (BB) Enclosure with Mounting Holes

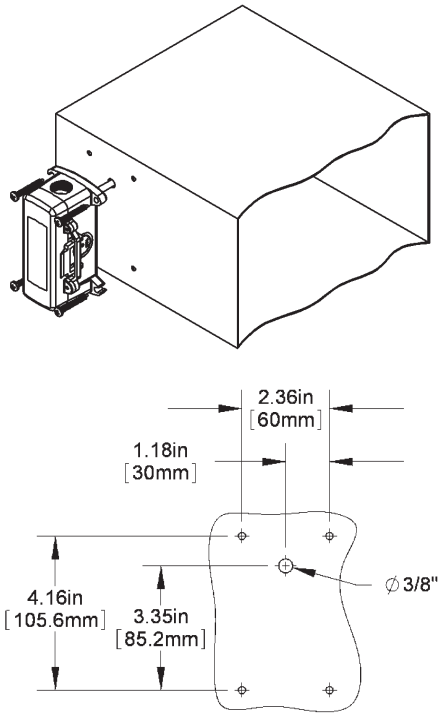

Fig. 2: Duct Mounted Unit in a BAPI-Box 2 (BB2) Enclosure with Mounting Holes

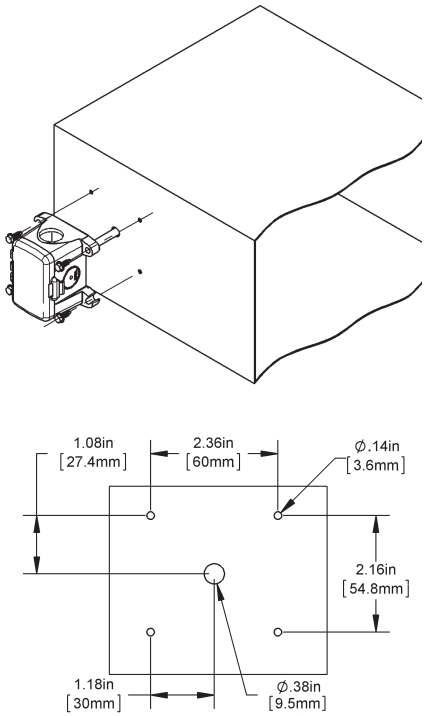

Fig. 3: Duct Mounted Unit in a BAPI-Box 4 (BB4) Enclosure with Mounting Holes

Specifications subject to change without notice.

Building Automation Products, Inc., 750 North Royal Avenue, Gays Mills, WI 54631 USA
Tel:+1-608-735-4800 • Fax+1-608-735-4804 • E-mail:sales@bapihvac.com • Web:www.bapihvac.com

Outside Air Unit Mounting:

Mount the Outside Air sensor in the shade so that direct sunlight will never hit the sensor Mount the sensor with the probe pointed down as shown in Figures 4 and 5. If the wire-way entrance is from the back, be sure to drill a hole large enough for your sensor cable can pull through your mounting surface.

Mount the unit to the surface with a wiring knock-out centered over the wiring hole. Pull the wiring into the unit and terminate using sealant filled connectors. Best practice is to caulk the wiring hole after the wiring is installed. Be sure that the foam on the back of the unit makes a good weather tight seal.

If entry is from a surface conduit be sure to enter from the bottom or side, not from the top. Be sure to use seal-tight connections and caulk to prevent water entry into the enclosure.

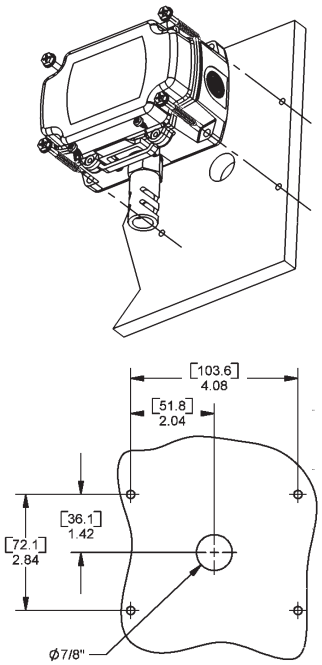

Fig. 4: Outside Air Unit in a BAPI-Box (BB) Enclosure with Mounting Holes

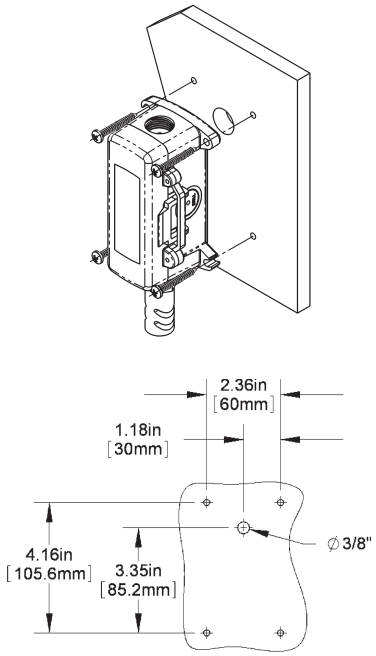

Fig 5: Outside Air Unit in a BAPI-Box 2 (BB2) Enclosure with Mounting Holes

Immersion Unit Mounting:

Application: Figures 6 and 7 show a typical four-inch thermowell and four-inch immersion probe installed into an eight inch pipe. In a properly insulated pipe with liquid or steam, the temperature is essentially the same across the entire cross section of the pipe. Usually thermowells are sized to extend to the center of the pipe; however, shorter thermowells will give proper temperature readings if properly insulated. The shorter thermowells are used in pipes with high flow velocities. See Application notes "Thermowells Explained" on our website wwwbapihvac.com.

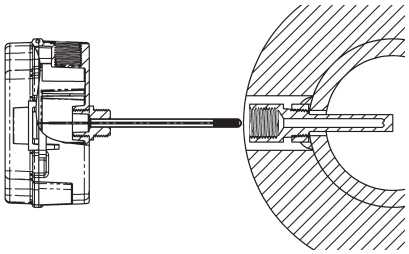

Fig. 6: Immersion Thermowell Mounted Unit in a BAPI-Box or BAPI-Box 4 (BB, BB4) Enclosure

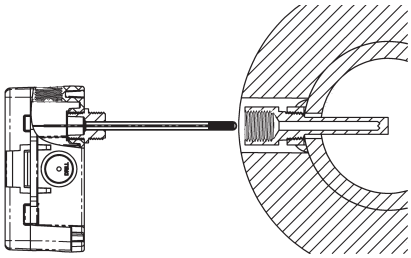

Fig. 7: Immersion Thermowell Mounted Unit in a BAPI-Box 2 (BB2) Enclosure

Thermowell Installer: Typically a Pipe Fitter drills a ¾-inch hole into the pipe where the thermowell is needed. A customer provided fitting, called a Threadolet or Weldolet, is welded to the pipe over the hole. The Threadolet has a ½" NPT thread in the center. Thread sealant such as Teflon tape or pipe dope is applied to the ½" NPT threads of the thermowell. The thermowell is then inserted into the Threadolet and tightened. Estimates on insertion depths can be seen in our Application note "Thermowells Explained" on our website wwwbapihvac.com.

Sensor Installation: Insert the immersion sensor into the well with the plastic screw fitting into the opening on the well. Hand tighten the immersion sensor snugly without too much torque. Make sure that the tip of the immersion sensor is in contact with the bottom of the well by pushing on the top of the probe, without damaging the wires, to bottom out the probe in the thermowell. The unit is designed so that the temperature probe slides in the junction box as the sensor hits the bottom of the well.

Strap Mount Application

Application: This sensor technique is for reading the fluid temperature in a pipe by reading the temperature of the pipe. Properly installed Strap-On sensors with insulation around the local strap-on sight will offer a very accurate temperature of the water inside the pipe to within .5 °F or better of the inside pipe water temperature.

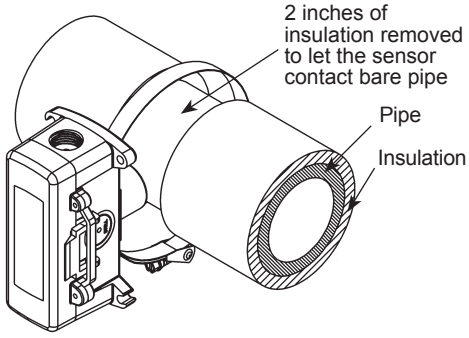

Fig. 8: Clamp-On Strap Unit Mounting (BAPI-Box 2 Enclosure shown but mounting is similar for all BAPI-Boxes.)

Clamp-On Strap Unit Installation: BA/#-S

1. Figure 8 show a typical direct pipe installation for pipes from 2” to 4.5”. Stripping away insulation is OK.
2. Larger pipes can be accommodated by adding another, customer supplied, stainless steel hose clamp extending the possible pipe diameter.
3. If there is insulation, clean away a section of the pipe insulation a minimum of 2” all around the pipe. The copper sensor pad and SS strap must be in direct contact with the metal or plastic pipe. Note: Nothing should be between the copper plate sensor and the bare pipe.
4. Tighten the strap-so that the sensor does not rotate around the pipe and so that the foam is compressed not more than 50% allowing the copper sensor plate to form (bend) to the pipe curvature for maximum temperature conduction. BAPI recommends pre-forming the copper plate by bending it around the pipe with your fingers.
5. After the strap-on sensor is securely mounted, add insulation a minimum of 1” thick and a minimum of 4 pipe diameters on each side of the copper sensor pad. (EXPL. A 2” pipe should have 8” of insulation on each side of the sensor). Only cover the sensor box to the top of the metal cover plate or to the BB door hinge so termination and servicing can be completed.
6. Terminate per the following Wiring and Termination Section.

String-Loaded Strap Unit Installation: BA/#-STP

1. Figure 9 shows a typical direct pipe installation for insulated pipes from 5” to 14”. Insulation thickness accommodated is 0.5” to 2.5”.
2. Larger pipes can be accommodated by adding another, customer supplied, tie rap strap extending the possible pipe diameter.
3. Make a 1.5 inch diameter hole in the insulation where the sensor is to be placed and clean the pipe from debris. Extend the spring so the copper sensor pad is in direct contact with the metal or plastic pipe. ***Note:*** *No debris should be between the copper plate sensor and the bare pipe.* The spring can retract to a minimum insulation thickness of ~.5” compressed to ~2.5” extended.
4. Position the box and sensor over the hole.
5. Tighten the strap so that the sensor spring is compressed no more than 50% allowing the copper sensor plate to form (bend) to the pipe curvature for maximum temperature conduction. BAPI recommends pre-forming the copper plate by bending it around the pipe with your fingers. Extend the spring further by turning it clockwise if the copper sensor plate contact is questionable. The copper sensor plate must be in direct contact with the pipe.
6. After the strap on sensor is securely mounted, add insulation back in (backfill) around the spring extension, using the removed insulation, so that no heat or cold from the pipe can escape.
7. If more insulation is desired, only cover the sensor box to the top of the metal cover plate or to the BB door hinge so termination and servicing can be completed.
8. Terminate per the following Wiring and Termination Section.

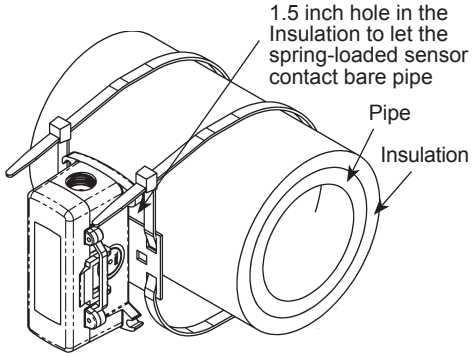

Fig. 9: Spring Loaded Strap Unit Mounting (BAPI-Box 2 Enclosure shown but mounting is similar for all BAPI-Boxes.)

Remote Probe Application

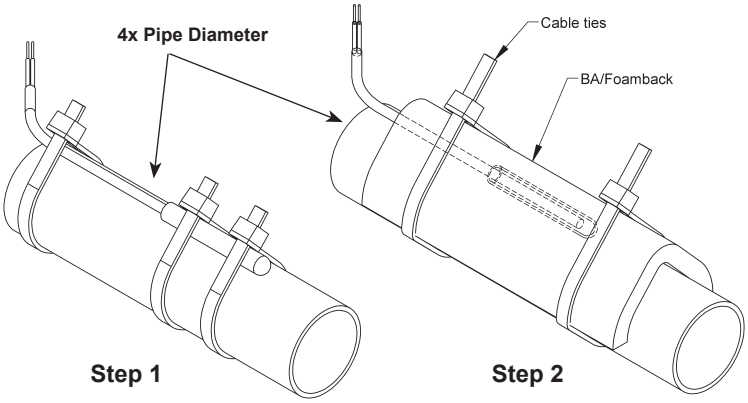

Fig 10: Stainless Steel Remote Probe Strapped to Bare Pipes

Step 1: Secure Sensor To Have Good Contact With Bare Pipe

Step 2: Insulate Over The Sensor (See Notes Below)

Notes: Insulation should be installed a minimum of 4 pipe diameters on each side of the strap-on sensor.

Example: ½" pipe x 4 = 2".

Insulation should be 2" on each side of the sensor wrapped all the way around the pipe.

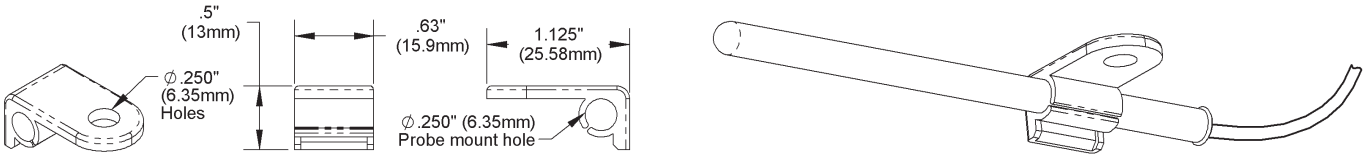

Fig 11: Break-Off Tab from a BAPI Flexible Probe Bracket **(BA/FPB)** shown above, and Break-Off Tab Used to Mount a Stainless Steel Remote Probe shown below.

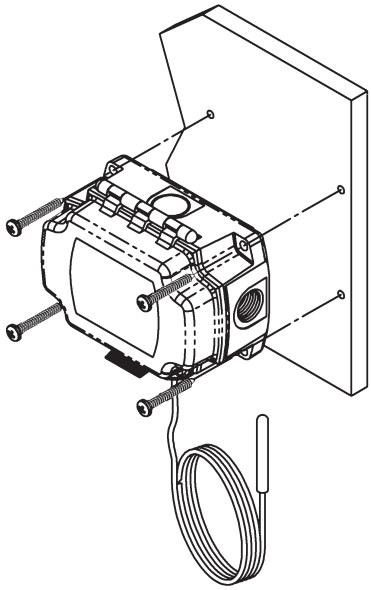

Fig 12: Remote Probe with BAPI-Box **(BB)** Enclosure

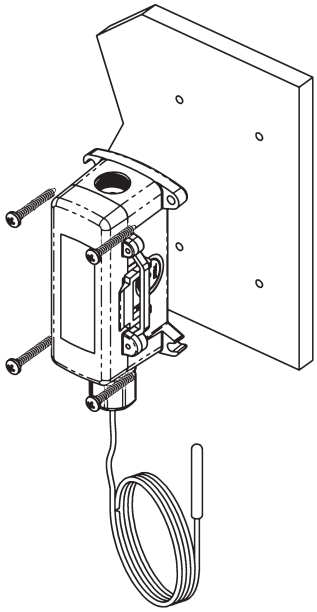

Fig 13: Remote Probe with BAPI-Box 2 **(BB2)** Enclosure

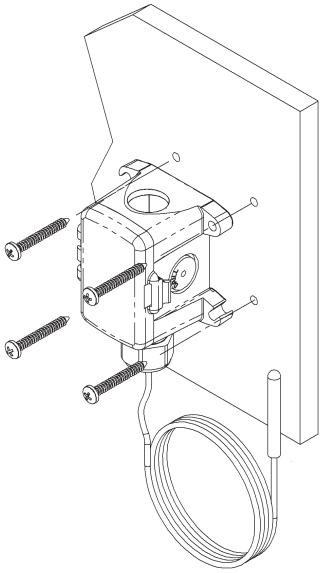

Fig 14: Remote Probe with BAPI-Box 4 **(BB4)** Enclosure

Note: Mount the enclosure close to the sensing location with #8 screws that are appropriate for the material you're mounting to.

Specifications subject to change without notice.

Wiring and Termination

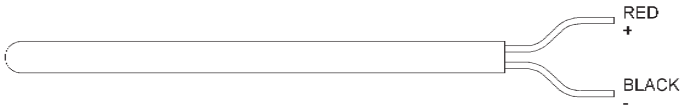

Fig. 15: AD592 Semiconductor 2-Wire Sensor

Fig. 16: AD592 Semiconductor with 10K Ohm Shunt Resistor

Table 2: 592 2-Wire Sensors
1. Install a 10KΩ 0.1% resistor from the controller's analog input to the controller's ground or common.
2. If you are using a separate DC power supply, connect the power supply's negative terminal to the controller's ground or common..
3. Connect the 592 sensor's black wire to the controller's analog input.
4. Connect the 592 sensor's red wire to 5 to 30 VDC.

Table 3: 592 3-Wire Sensors
1. All BAPI BA/592-10K, 3-wire, sensors have a built in 10KΩ 0.1% resistor.
2. If you are using a separate DC power supply, connect the power supply's negative terminal to the controller's ground or common..
3. Connect the 592 sensor's black wire to the controller's ground or common.
4. Connect the 592 sensor's white wire to the controller's analog input.
5. Connect the 592 sensor's red wire to 5 to 30 VDC.

Temperature Measurement Offsetting

All **BA/592** sensors will have the following information provided on a label:

Therm Reading_____
The actual temperature reading according to a thermometer that is certified traceable to recognized standards by the National Institute of Standards and Technology (NIST).

Sensor Reading _____
The temperature reading according to the AD592 sensor. The output is dropped across a 10KΩ 0.1%, read in mV and converted to a Fahrenheit temperature.

Offset_____
The difference between the Thermometer Reading and the Sensor Reading

To correct the Sensor Reading, simply add the offset value to the sensor reading so that it equals the thermometer reading.

e.g. Therm Reading = 74.6, Sensor Reading = 73.0, Offset = +1.6
Correction: Add (+1.6) °F to the sensor for an accurate reading: 73 + 1.6 = 74.6°F

e.g. Therm Reading = 75.4, Sensor Reading = 77.2, Offset = -1.8
Correction: Add (-1.6) °F to the sensor for an accurate reading: 77.2 + (-1.8) = 75.4°F

Diagnostics

GENERAL TROUBLESHOOTING AND POSSIBLE SOLUTIONS

- Determine that the input is set up correctly in the controller's and building automation software.
- Check wiring for proper termination
- Check for corrosion at either the controller or the sensor. Clean off the corrosion, re-strip the interconnecting wire and reapply the connection. In extreme cases, replace the controller, interconnecting wire and/or sensor.
- Label the terminals that the interconnecting wires are connected to at the sensor end and the controller end. Disconnect the interconnecting wires from the controller and the sensor. With the interconnecting wires separated at both ends measure the resistance from wire-to-wire with a multimeter. The meter should read greater than 10 Meg-ohms, open or OL depending on the meter you have. Short the interconnecting wires together at one end. Go to the other end and measure the resistance from wire-to-wire with a multimeter. The meter should read less than 10 ohms (22 gauge or larger, 250 feet or less). If either test fails, replace the wire.

Diagnostics continued...

592 SENSOR TROUBLESHOOTING

Note: *The BAPI crimp-on sealant filled connectors have a convenient hole opposite the wire opening to insert a meter probe for measurements.*

1. Measure the temperature at the sensor's location with an accurate standard.
2. Set your meter to the Volts setting and measure from the controller ground (black sensor lead) to the 592's power lead (red sensor lead) for 5 to 30 VDC.
4. Set your meter to the mV setting.
   a) For two wire units place a 10KΩ resistor between the sensors black lead and the return wire to the controller. Measure and record the voltage across the resistor.
   b) For three-wire units measure and record the voltage from the black lead to the white lead.
5. Using Table 4, if the sensor voltage is greater or less than 0.050VDC from the expected voltage measurement, call BAPI technical support.
6. If the sensor reads properly, verify that the controller is operating correctly.
7. If the sensor reads improperly, determine if the sensor is exposed to an external source different from the measured environment (conduit draft).

Table 4: 592 Output

Temperature		592 Semiconductor	
°F	°C	Output Current uA	Output Voltage across 10KΩ
50	10	283.2	2.832
60	15.56	288.8	2.888
62	16.67	289.9	2.899
64	17.78	291	2.91
66	18.89	292.1	2.921
68	20	293.2	2.932
70	21.11	294.3	2.943
72	22.22	295.4	2.954
74	23.33	296.5	2.965
76	24.44	297.6	2.976
78	25.56	298.8	2.988
80	26.67	299.9	2.999
82	27.78	301	3.01
84	28.89	302.1	3.021
86	30	303.2	3.032
88	31.11	304.3	3.043
90	32.22	305.4	3.054
100	37.78	311	3.11

Specifications

Probe: 304 Stainless steel, 0.25" OD
Duct Gasket: ¼" Closed cell foam (impervious to mold)
Immersion: ½" NPSM Instrument connection
OSA Probe: Vented PVC weather shield ½" OD
Strap-On Sensor: Copper sensor plate, 24 AWG, 1.25" diameter
Mounting: Extension tabs (ears), 3/16" holes
Enclosure Types: Part Number Designator in Bold
BAPI-Box **-BB,** with four ½" FNPT & one ½" drill-out
BAPI-Box 2 **-BB2,** with three ½" NPSM & three ½" drill-outs
BAPI-Box 4: **-BB4,** with four ½" drill-outs

Enclosure Ratings
BAPI-Box **-BB,** NEMA 4, IP66
BAPI-Box 2 **-BB2,** NEMA 4, IP66
BAPI-Box 4 **-BB4,** IP44

Enclosure Materials
BAPI-Box **-BB**, Polycarbonate, UL94V-0, UV rated
BAPI-Box 2 **-BB2**, Polycarbonate, UL94V-0, UV rated
BAPI-Box 4 **-BB4**, Polycarbonate & Nylon, UL94V-0

Ambient (Encl.): 0 to 100% RH, Non-condensing, -40 to 185ºF, (-40 to 85ºC)
Agency: RoHS

AD592, Solid State Semiconductor Specifications

Temp. Sensitivity: 2 wire, 1uA/ºC (0.556uA/ºF)
3 wire, 10mV/ºC, (5.556mV/ºF
Reference Point: 25ºC (77ºF)
AD592, 298.20uA
AD592-10K, 2.982VDC
Voltage Supply: 5VDC to 30VDC
Temp. Range: -25 to 105ºC (-13 to 221ºF)
Accuracy: With Factory offset to 0.1ºC (0.18ºF)
Raw AD592, ±3.3ºF (1.8ºC) from -13 to 221ºF
Linearity: ±0,15ºC max from 0 to 70ºC
(±0.27ºF max from 32 to 158ºF)
Repeatability: ± 0.1ºC (±0.18ºF)
Response time: 10 seconds at the 63% step

LM334, Solid State Semiconductor Specifications

Temp. Sensitivity: 2 wire, 1uA/ºC (0.556uA/ºF)
3 wire, 10mV/ºC, (5.556mV/ºF)
Reference Point: 25ºC (77ºF)
LM334, 298.20uA
LM334-10K, 2.982VDC
Voltage Supply: 5VDC to 30VDC
Temp. Range: Nominal, 0 to 70ºC (32 to 158ºF), 100ºCmax
Accuracy: With Factory offset to 0.1ºC (0.18ºF)
Raw LM334, ±10.8ºF (6ºC) from 32 to 212ºF
Linearity: ±0,15ºC max from 0 to 70ºC
Repeatability: ± 0.1ºC (±0.18ºF)
Response Time: 10 seconds at the 63% step

Specifications subject to change without notice.