T100/T1K Transmitter Room Unit

Installation and Operation Instructions

16988_ins_T1K_RSOD rev. 2/18/11

Product Identification

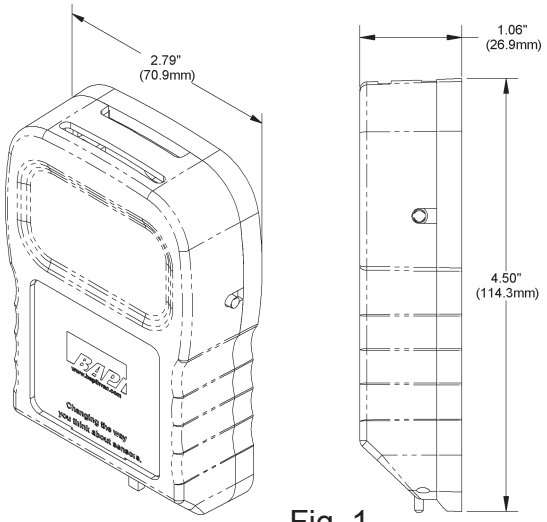

Fig. 1
T100/T1K Transmitter
Room Unit

Mounting

JUNCTION BOX

1. Pull the wire through the wall and out of the junction box, leaving about six inches free.
2. Pull the wire through the hole in the base plate.
3. Secure the base to the box using the #6-32 x 1/2 inch mounting screw provided.
4. Terminate the unit according to the guidelines in **Termination** on page 2.
5. Attach Cover by latching it to the top of the base, rotating the cover down and snapping it into place.
6. Secure the cover by backing out the lock-down screws using a 1/16" Allen wrench until they are flush with the bottom of the cover.

DRYWALL MOUNTING

1. Place the base plate against the wall where you want to mount the sensor.
2. Using a pencil, mark out the two mounting holes and the area where the wires will come through the wall.
3. Drill two 3/16" holes in the center of each marked mounting hole. Insert a drywall anchor into each hole.
4. Drill one 1/2" hole in the middle of the marked wiring area.
5. Pull the wire through the wall and out of the 1/2" hole, leaving about six inches free.
6. Pull the wire through the hole in the base plate.
7. Secure the base to the drywall anchors using the #6 x 1 inch mounting screws provided.
8. Terminate the unit according to the Termination guidelines in on pg 2.
9. Attach Cover by latching it to the top of the base, rotating the cover down and snapping it into place.
10. Secure the cover by backing out the lock-down screws using a 1/16" Allen wrench until they are flush with the bottom of the cover.

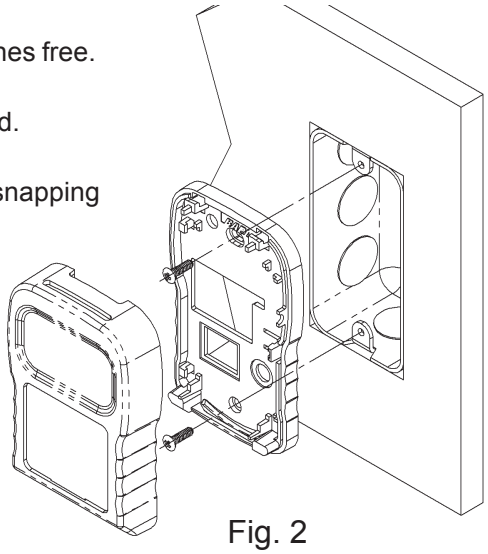

Fig. 2
Mounting hardware is provided for both junction box and drywall installation (junction box installation shown).

NOTE: *In a wall-mount application, the wall temperature and the temperature of the air within the wall cavity can cause erroneous readings. The mixing of room air and air from within the wall cavity can lead to condensation, erroneous readings and premature failure of the sensor. To prevent these conditions, seal the conduit leading to the junction box.*

Specifications subject to change without notice.

Building Automation Products, Inc., 750 North Royal Avenue, Gays Mills, WI 54631 USA
Tel:+1-608-735-4800 • Fax+1-608-735-4804 • E-mail:sales@bapihvac.com • Web:www.bapihvac.com

Termination

BAPI recommends using twisted pair of at least 22AWG and sealant filled connectors for all wire connections. Larger gauge wire may be required for long runs. All wiring must comply with the National Electric Code (NEC) and local codes.

Do NOT run this device's wiring in the same conduit as AC power wiring of NEC class 1, NEC class 2, NEC class 3 or with wiring used to supply highly inductive loads such as motors, contactors and relays. BAPI's tests show that fluctuating and inaccurate signal levels are possible when AC power wiring is present in the same conduit as the signal lines. If you are experiencing any of these difficulties, please contact your BAPI representative

STOP

BAPI does not recommend wiring the sensor with power applied as accidental arcing may damage the product and will void the warranty

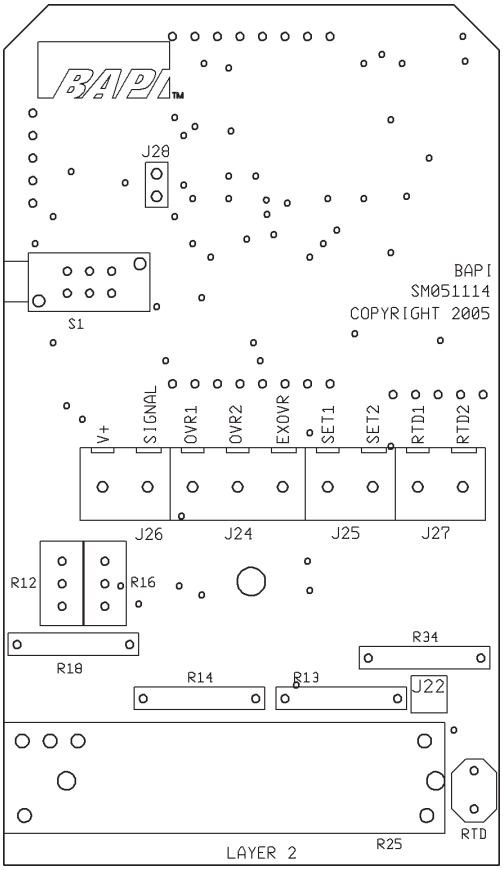

Fig. 3
T100/T1K Circuit Board

TERMINAL DESCRIPTIONS

V+..... Unit Power
Temp only current loop:
7 to 30 VDC (28 VDC max recommended)

Temp & Setpoint current loop:
12 to 30 VDC (28 VDC max recommended)

SIGNAL..... .... Temperature signal (4 to 20 mA current loop) To Analog Input of Controller

OVR1 & OVR2.... Override Output (Dry Contact) (300mA @ 30VDC max)
..... Note: If unit is ordered as Common Ground (-CG), then OVR2 is connected to SET2

EXT OVR..... .... Allows remote control of the LCD occupancy indicator. Closing a dry contact connected between EXT OVR and RTD2 will turn on the indicator.

SET1 & SET2..... Resistive Setpoint Output.Note: If unit is ordered as Common Ground (-CG), then SET2 is connected to OVR2

SET1..... Current Loop Setpoint Output (Setpoint Option 16) (4 to 20 mA current loop) To Analog Input of Controller

RTD1 & RTD2. Remote RTD sensor

Note: When unit is ordered as resistive setpoint output and common ground, connect either OVR2 or Set2 to Ground (GND or Common) of controller.

Optional Communication Jack Wiring

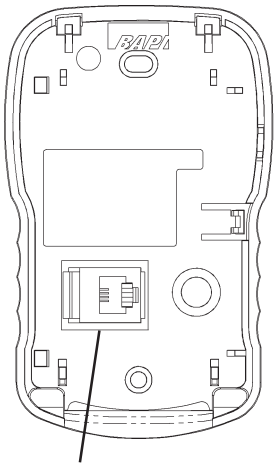

C11L on BAPI-Stat 2 Base (Front)

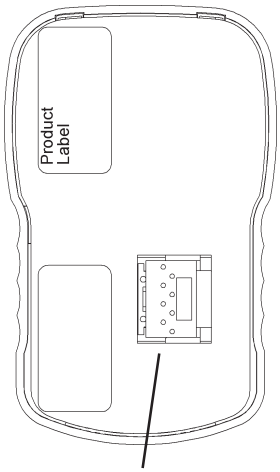

C11L on BAPI-Stat 2 Base (Back)

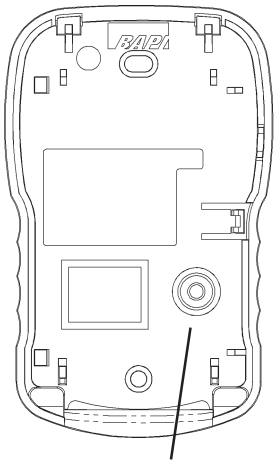

C35L on BAPI-Stat 2 Base (Front)

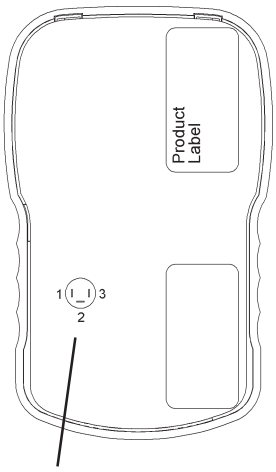

C35L on BAPI-Stat 2 Base (Back)

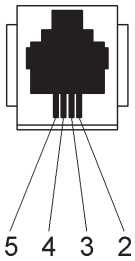

Fig. 4
C11L Comm Jack

C11L Wiring	
Comm Jack Pin	Wire Color
1	Not Connected
2	Black
3	Red
4	Yellow
5	White or Green
6	Not Connected

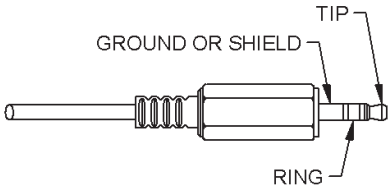

Fig. 5
C35L Comm Jack

Note: Male Jack shown for clarity

C35L Wiring	
	Wire Color
Ground	Black
Tip	White
Ring	Red

Specifications subject to change without notice.

Troubleshooting

POSSIBLE PROBLEMS:	POSSIBLE SOLUTIONS:
General troubleshooting	- Determine that the input is set up correctly in the controller's and building automation software. - Check wiring for proper termination - Check for corrosion at either the controller or the sensor. Clean off the corrosion, re-strip the interconnecting wire and reapply the connection. In extreme cases, replace the controller, interconnecting wire and/or sensor. - Label the terminals that the interconnecting wires are connected to at the sensor end and the controller end. Disconnect the interconnecting wires from the controller and the sensor. With the interconnecting wires separated at both ends measure the resistance from wire-to-wire with a multimeter. The meter should read greater than 10 Meg-ohms, open or OL depending on the meter you have. Short the interconnecting wires together at one end. Go to the other end and measure the resistance from wire-to-wire with a multimeter. The meter should read less than 10 ohms (22 gauge or larger, 250 feet or less). If either test fails, replace the wire.
Temperature sensor is reading incorrectly in controller software	- Determine if the input is set up correctly in the controllers and BAS software - Check if the RTD wires are physically open or shorted together - *Measure the physical temperature at the temperature sensor's location using an accurate temperature standard. Disconnect the temperature sensor wires and measure the temperature sensor's resistance with an ohmmeter. Compare the temperature sensor's resistance to the appropriate temperature sensor table on the BAPI web site. (BAPI's web site is found at www.bapihvac.com; click on the button labeled SENSORS on the left of the screen and then click on the type of sensor you have.) If the measured resistance is incorrect, replace the sensing element. Measure the transmitter current by placing an ammeter in series with the controller input. Set the ammeter to the 200mA range. The current should read according to the equation shown at left. If the transmitter's measured output does not agree with the computed output, replace the transmitter. If both measurements are correct, there is nothing wrong with the sensor and transmitter combination, look elsewhere.
Setpoint reading is incorrect	- Make sure that the setpoint output is correct. Remove the setpoint output wire and check the output for the correct resistance or voltage output. See the product label for your specific range. Don't forget to reconnect the wire.
Override is not working correctly	-Check that the resistance across the override output is less than 5 ohms when the override switch is pushed

Temperature Equation

$$T = T_{low} + \frac{(A-4)x(T_{span})}{16}$$

T = Temperature at sensor
T_{low} = Low temperature of span
T_{high} = High temperature of span
$T_{span} = T_{high} - T_{low}$
A = Ammeter reading in mA

Specifications subject to change without notice.