Termination

BAPI recommends using twisted pair of at least 22AWG and sealant filled connectors for all wire connections. Larger gauge wire may be required for long runs. All wiring must comply with the National Electric Code (NEC) and local codes.

Do NOT run this device's wiring in the same conduit as AC power wiring of NEC class 1, NEC class 2, NEC class 3 or with wiring used to supply highly inductive loads such as motors, contactors and relays. BAPI's tests show that fluctuating and inaccurate signal levels are possible when AC power wiring is present in the same conduit as the signal lines. If you are experiencing any of these difficulties, please contact your BAPI representative

STOP

BAPI does not recommend wiring the sensor with power applied as accidental arcing may damage the product and will void the warranty

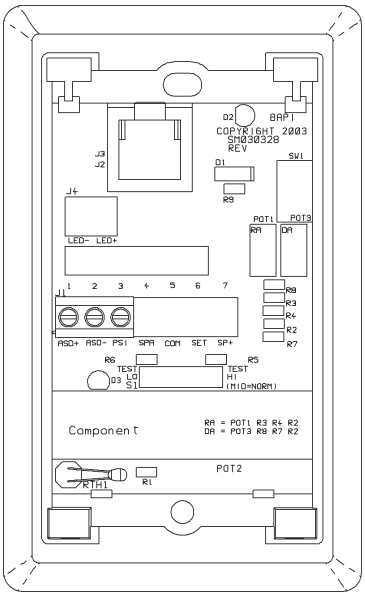

Pin 1-COM-[WHT]

Pin 2-SENS-[BLK]

Pin 3-SP-[R(V+)]

Troubleshooting

Possible Problems:	**Possible Solutions:**
Controller reports higher than actual temperature	- Confirm the input is set up correctly in the front end software - Verify that the sensor wires are not physically shorted - Check wiring for proper termination - Verify the "Sensor" output is correct from (J2) pin 1 to Pin 2
Controller reports lower than actual temperature	- Is the themistor damaged or broken - Confirm the input is set up correctly in the front end software - Verify that the sensor is not physically open - Check wiring for proper termination - Verify the "Sensor" output is correct from (J2) Pin 1 to Pin 2

Sensor Output Table

°F	°C	3K	°F	°C	3K	°F	°C	3K
50.0	10.0	5,971	70.0	21.1	3,565	82.0	27.8	2,658
55.0	12.8	5,232	72.0	22.2	3,392	84.0	28.9	2,534
60.0	15.6	4,594	74.0	23.3	3,229	86.0	30.0	2,417
62.0	16.7	4,364	76.0	24.4	3,074	88.0	31.1	2,305
64.0	17.8	4,147	77.0	25.0	3,000	90.0	32.2	2,200
66.0	18.9	3,941	78.0	25.6	2,928	95.0	35.0	1,959
68.0	20.0	3,748	80.0	26.7	2,789	100.0	37.8	1,748

Specifications subject to change without notice.

Mounting

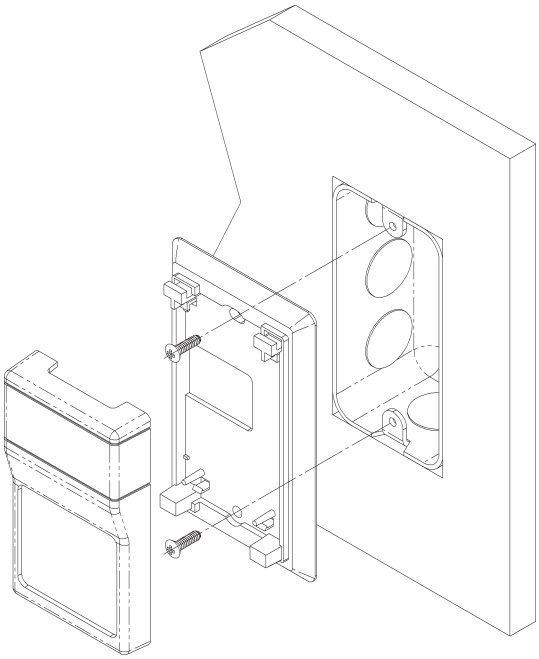

Fig. 2

Mounting hardware is provided for both junction box and drywall installation (junction box installation shown).

Junction Box
1. Pull the wire through the wall and out of the junction box, leaving about six inches free.
2. Pull the wire through the hole in the base plate.
3. Secure the plate to the box using the #6-32 x 1/2 inch mounting screw provided.
4. Terminate the unit according to the guidelines in **Termination** on page 1.
5. Attach Cover by latching it to the top of the base, rotating the cover down and snapping it into place.
6. Secure the cover by backing out the lock-down screws using a 1/16" allen wrench until they are flush with the bottom of the cover.

Drywall Mounting
1. Place the base plate against the wall where you want to mount the sensor.
2. Using a pencil mark out the two mounting holes and the area where the wires will come through the wall.
3. Drill two 3/16" holes in the center of each marked mounting hole. Insert a drywall anchor into each hole.
4. Drill one 1/2" hole in the middle of the marked wiring area.
5. Pull the wire through the wall and out of the 1/2" hole, leaving about six inches free.
6. Pull the wire through the hole in the base plate.
7. Secure the base to the drywall anchors using the #6 x 1 inch mounting screws provided.
8. Terminate the unit according to the guidelines in **Termination** on page 1.
9. Attach cover by latching it to the top of the base, rotating the cover down and snapping it into place.
10. Secure the cover by backing out the lock-down screws using a 1/16" allen wrench until they are flush with the bottom of the cover.

NOTE
In a wall-mount application, the wall temperature and the temperature of the air within the wall cavity can cause erroneous readings. The mixing of room air and air from within the wall cavity can lead to condensation, erroneous readings and premature failure of the sensor.
To prevent these conditions, seal the conduit leading to the junction box and use BAPI's adhesive backed, foam insulating pad centered over the hole(order part number BA/FOAMBACK).

Building Automation Products, Inc., 750 North Royal Avenue, Gays Mills, WI 54631 USA
Tel:+1-608-735-4800 • Fax+1-608-735-4804 • E-mail:sales@bapihvac.com • Web:www.bapihvac.com