PreCon Style Room Units

Temperature Sensors

Rev. 01/10/14

Features & Options

- Low Profile Enclosure
- Optional Setpoint and Override
- Optional Communication Jack
- Optional Bi-Metal Indicator
- Wide Selection of Temperature Sensing Elements
- Limited Lifetime Warranty

100% Compatible with your System GUARANTEED!

PreCon Style with Setpoint and Override

Setpoint

A 3-position switch allows limited control over the zone's Setpoint. In the center position, the Setpoint is at the system default. If the switch is moved to the left or right, the Setpoint is decreased or increased by a system defined amount.

Override

Allows the occupant to extend the zone occupancy schedule by a system determined amount. Each time the switch is moved to the side, the amount of time that the occupancy is extended increases by a set amount of time.

Communication Jack

An optional communication jack is available.

Bi-Metal Indicator

An optional Bi-Metal Indicator can display room temperature; accurate to ±1 °F. The display is protected by an acrylic plate and comes with a 50 to 90 °F or 10 to 30 °C legend.

PreCon Style with Bi-metal Indicator

For detailed specs on the individual Sensors & Transmitters, turn to "Sensors".

* All Passive Thermistors 20KΩ and smaller are CE compliant.

BAPI Adaptor Plates for Retrofits

The BAPI Adaptor Plates are designed for locations where a larger room unit has been previously mounted. The plates are made of flame retardant ABS plastic, and are available in four colors to match any BAPI room unit. The plates can be mounted vertically or horizontally. For more info, see the Accessories section.

Plate & Room Unit

Adaptor Plate

Specifications

Environmental Operation Range:
Temperature: 32 to 122 °F (0 to 50 °C)
Humidity: 0 to 95%, non-condensing

Material: ABS Plastic

Material Rating: UL 94, HB

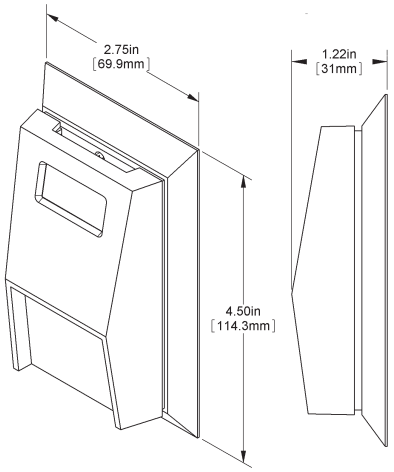

Building Automation Products, Inc. • 750 North Royal Avenue, Gays Mills, WI 54631 USA
Tel: +1-608-735-4800 • Fax: +1-608-735-4804 • Email: sales@bapihvac.com • Web: www.bapihvac.com

Ordering Information	PreCon Style Room Units - Temperature				
BA/					
	Sensor Type (Required) Use the designator number (shown to the left in bold) to indicate the sensor				
	#				
			THERMISTORS		**RTDs**
		1.8K	1.8K Ω @ 25 °C	**100**	100 Ω Platinum @ 0 °C, .385 Ω/°C temp. coeff.
		2.2K	2.2K Ω @ 25 °C	**100[3W]**	3 Wire 100 Ω Plat. @ 0 °C, .385 Ω/°C temp. coeff.*
		3K	3K Ω @ 25 °C	**1K[375]**	1K Ω Platinum @ 0 °C, 3.75 Ω/°C temp. coeff.
		3.25K	3.25K Ω @ 25 °C (T30 type)	**1K[NI]**	1K Ω Nickel @ 21°C, 5 Ω/°C temp. coeff.
		3.3K	3.3K Ω @ 25 °C	**1K**	1K Ω Platinum @ 0 °C, 3.85 Ω/°C temp. coeff.
		10K-2	10K Ω @ 25 °C	**2K**	2K Ω Silicon @ 20 °C, 8 Ω/°C temp. coeff.
		10K-3	10K Ω @ 25 °C		
		10K-3[11K]	5,238 Ω @ 25 °C		**SEMICONDUCTORS**
		20K	20K Ω @ 25 °C	**334**	LM334 Semiconductor
		47K	47K Ω @ 25 °C	**592**	AD592 Semiconductor, 273 µA @ 0 °C
		50K	50K Ω @ 25 °C	**592-10K**	AD592 Semicond. with 10 kΩ shunt resistor, 2.73 V @ 0 °C
		100K	100K Ω @ 25 °C		
			TEMPERATURE TRANSMITTERS *Must include a "range" figure*		
		T1K[range]	1K Platinum RTD, 1,000 Ω @ 0 °C with 4 to 20 mA Output		
		T1KM[range]	1K Platinum RTD, 1,000 Ω @ 0 °C with MATCHED* 4 to 20 mA Output		
			TEMPERATURE TRANSMITTER RANGES		
			Custom temperature transmitter ranges are available. Common ranges are listed below		
			65 TO 80F **18 TO 27C**	**40 TO 90F**	**4 TO 32C**
			60 TO 80F **15 TO 27C**	**45 TO 96F**	**7 TO 35C**
			55 TO 85F **13 TO 30C**	**0 TO 100F**	**-18 TO 38C**
			50 TO 90F **10 TO 32C**		
		Enclosure (Required)			
		-RSZ	PreCon Style Room Enclosure		
			Optional Plus Model		
			+	"Plus" Model includes Setpoint, Override, and Comm Jack (+ Model is not available with a temperature transmitter)	
				Optional Indicator	
				BM5090	Bi-Metal Indicator: Black 50 to 90 °F legend on a brushed aluminum plate
				BM1030	Bi-Metal Indicator: Black 10 to 30 °C legend on a brushed aluminum plate
EXAMPLE					
BA/	**10K-2**	**-RSZ**	**+**	**BM5090**	
Example Part Number: BA/10K-2-RSZ+BM5090					
Your Part Number:					

* The 100[3W] sensor is not available with RSZ Model.

Call BAPI if you have questions about the above ordering grid or the configuration of the product you are ordering.