D2 IEQ Room Sensor

Air Quality Sensors

Rev. 12/16/10

Features & Options

- Air Quality Alone or Air Quality, Temperature and Humidity Combination
- Corresponds to ASHRAE's Demand Controlled Ventilation algorithm
- Detects Human Metabolic VOC Emissions for Occupancy Beyond CO_2
- 0-5, 0-10 or 2-10 VDC Analog Outputs

The IEQ Sensor is an accurate and reliable way of incorporating Demand Controlled Ventilation into a building's HVAC strategy. It measures the Total Volatile Organic Compounds — which are as good an indicator of space occupancy as CO_2 — while also measuring the other contaminants which affect human comfort and health.

Most system designers use CO_2 sensors to indicate room occupancy as part of their DCV setup. The problem with this method is that it ignores the offensive odors and VOCs that may be present even when the CO_2 levels are low. BAPI's IEQ Sensor offers the best of both worlds. It measures all the contaminants in the air but outputs a signal that corresponds to a CO_2 level of 0-2,000 ppm, allowing system designers to use their existing DCV algorithms.

The VOC measurement range is the optimum value for demand controlled ventilation of any commercial, school or public building. The optional display alternates between the measured values and is field adjustable between °F or °C.

IEQ Sensors with Temp. Setpoint and Override with Gray and Off White Logo Plates

Demand Controlled Ventilation with Confidence!

Specifications

Power:
9-35 VDC @ 50 mA Max
(9-24VDC recommended) for 0-5 VDC Outputs

15-35 VDC @ 50mA Max
(15-24VDC recommended) for 0-10 VDC Output

No AC Power

Sensing Elements:
Humidity – Capacitive Polymer, ±1.8% RH Accuracy
Air Quality – Micro-machined Metal Oxide

Temperature Sensor
Thermistor, RTD or Semiconductor

Mounting: 2"x4" J-Box or drywall mount – screws provided

VOC Detection Range: 0 – 100%

Response Time: Less Than 60 Seconds (after Start-Up Time)

Start-Up Time: 15 minutes

Operating Environment:
32-122°F (0-50°C)
0-95% RH non-condensing

LCD Display
Main Display 3.5 digit numeric (% Contaminant, Temp & Humidity)

Occ/Un-occ BAPI Man Icon (Blk=Occupied)

Units F, C, %RH

Measurement Offsets (field adjustable)
±5° (F or C) in 0.1° increments
±5% RH in 0.1% RH increments
±5% Contaminants in 0.1% increments

Analog Outputs
(0-5, 0-10 or 2-10VDC (%RH only), >10KΩ impedance)

VOC Contaminants	0-100%
%RH	0-100% or 35-70% RH

Override Output

Contact	SPST
Sensor	Shorts out direct Temperature sensor (Temp)
Setpoint	Contact in parallel, resistive setpoint only

Material: ABS Plastic, Material Rated UL94V-0

Certifications: RoHS

Warranty Period: Two years from manufacture date

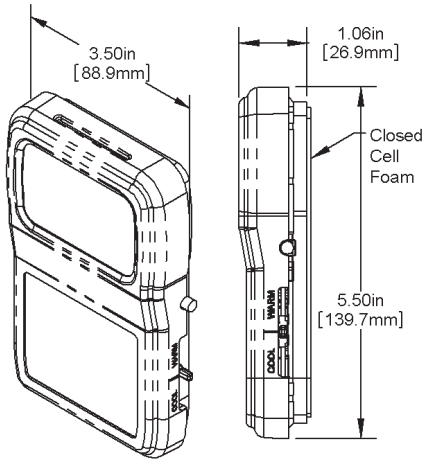

Building Automation Products, Inc., 750 North Royal Avenue, Gays Mills, WI 54631 USA
Tel: +1-608-735-4800 • Fax: +1-608-735-4804 • E-mail:sales@bapihvac.com • Web:www.bapihvac.com

Rev. 12/16/10

Ordering Information	**BAPI-Stat 3 Style Room Unit, Air Quality, Humidity and Temp**
BA/	

Temperature Display Mode

BS3F	Temperatures Displayed in °F
BS3C	Temperatures Displayed in °C
BS3X	No LCD Display

Air Quality Transmitter

-IEQ05	Air Quality Transmitter as 0 to 100% Contaminated, 0 to 5 VDC output
-IEQ10	Air Quality Transmitter as 0 to 100% Contaminated, 0 to 10 VDC output

Humidity Transmitter (Omit if not required)

-H205	±2% Humidity Transmitter, 0 to 5 VDC output
-H210	±2% Humidity Transmitter, 0 to 10 VDC output
-H212	±2% Humidity Transmitter, 2 to 10 VDC output

Setpoint Display Options (Skip if not required)

-#

Desired Range	Designator	Desired Range	Designator
-2 to +2	**P**	60 to 80 °F or 15 to 27 °C	**E**
-3 to +3	**A**	65 to 80 °F or 18 to 27 °C	**F**
-5 to +5	**B**	70 to 74 °F or 21 to 23 °C	**L**
50 to 90 °F or 10 to 32 °C	**C**	45 to 96 °F or 7 to 36 °C	**G**
55 to 85 °F or 13 to 30 °C	**D**		

Setpoint Output Value Range (Skip if not required)

##

Desired Range	Designator	Desired Range	Designator
674 to 274 Ω	**23**	15 to 5 kΩ	**61**
800 to 1200 Ω	**25**	0 to 20 kΩ	**80**
909 to 1309 Ω	**26**	4.75 to 24.75 kΩ	**81**
1800 to 2200 Ω	**27**	6.19 to 26.19 kΩ	**82**
0 to 1 kΩ	**40**	7.87 to 27.87 kΩ	**83**
500 to 1500 Ω	**41**	10 to 30 kΩ	**84**
2 to 3 kΩ	**42**	0 to 100 kΩ	**90**
0 to 10 kΩ	**60**	0 to 5 V	**00**

Additional Setpoint Ranges are Available. See App. Notes Pg.2 for complete list.

SETPOINT LEGEND (insert Designator #)

Legend Range	Designator	Legend Range	Designator
5-30 C	**L1**	65-80 F	**L4**
55-85 F	**L2**	COOL/WARM	**L6**
60-85 F	**L3**	WARM/COOL	**L7**

Sensor Type (If resistive sensor required)

0	100 Platinum RTD, 100Ω @ 0°C, 0.385Ω/°C temp coeff.
-1375	1K Platinum RTD, 1,000Ω @ 0°C, 3.75Ω/°C temp coeff.
-1NI	1K Nickel RTD, 1,000Ω @ 21°C, 5Ω/°C temp coeff.
-1	1K Platinum RTD, 1,000Ω @ 0°C, 3.85Ω/°C temp coeff.
-2	2K Silicon RTD, 2,000Ω @ 20°C, 8Ω/°C temp coeff.
-18	1.8K Thermistor, 1,800Ω @ 25°C
-3	3K Thermistor, 3,000Ω @ 25°C
-33	3.3K Thermistor, 3,300Ω @ 25°C
-102	10K-2 Thermistor, 10,000Ω @ 25°C
-103	10K-3 Thermistor, 10,000Ω @ 25°C
-10311	10K-3[11K] Thermistor, 5,238Ω @ 25°C, 11KΩ shunt resistor
-20	20K Thermistor, 20,000Ω @ 25°C
-50	50K Thermistor, 50,000Ω @ 25°C
-100	100K Thermistor, 100,000Ω @ 25°C
-592	AD592 Semiconductor, 273 µA @ 0°C

Override Configuration (Must select one)

-J	Override as a Separate Output. (Dry contact only, not intended to switch a load.)
-N	Override in Parallel (//) with Sensor
-P	Override in Parallel (//) with Setpoint: NOT available on voltage setpoint models
-Z	No Override. (Needed if no override is required)

Optional Communication Jack ***Mounted in unit's base***

-C11L	RJ11 (4 pin) Style Jack with Leads
-C11LT	RJ11 (4 pin) Style Jack with Leads and Terminal Block
-C35L	3.5 mm Phono Jack w/ Leads Attached
-C35LT	3.5 mm Phono Style Jack with Leads and Terminal Block
-C22L	RJ22 (4 pin) Style Jack with Leads Attached
-C22LT	RJ22 (4 pin) Style Jack with Leads and Terminal Block

Optional Test and Balance Switch

-TB	Three Position Switch

Logo Plate Color

-GRY	Gray Logo Plate Color (standard)
-OFW	Off White Logo Plate Color

EXAMPLE

BA/	**BS3F**	**-IEQ05**	**-H205**	**-A**	**80L6**	**0**	**-J**	**-C11L**	**-TB**	**-GRY**	
Example Part Number: BA/BS3F-IEQ05-H205-A80L60-J-C11L-TB-GRY											
Your Part Number:											

Call BAPI if you have questions about the above ordering/pricing grid or the configuration of the product you are ordering.

Building Automation Products, Inc., 750 North Royal Avenue, Gays Mills, WI 54631 USA
Tel: +1-608-735-4800 • Fax: +1-608-735-4804 • E-mail:sales@bapihvac.com • Web:www.bapihvac.com